95906429 UPS 25-80 180 50 Hz

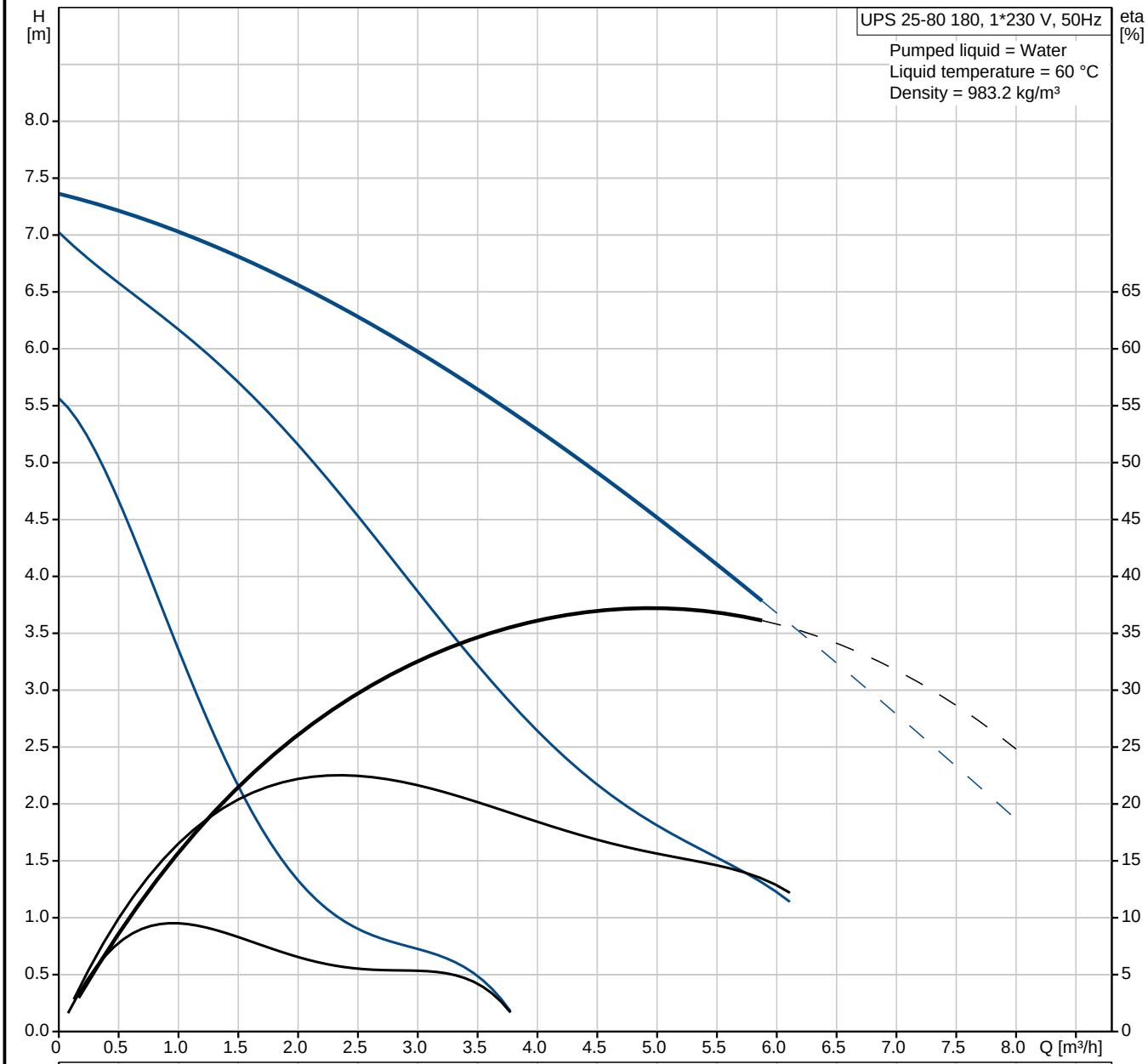

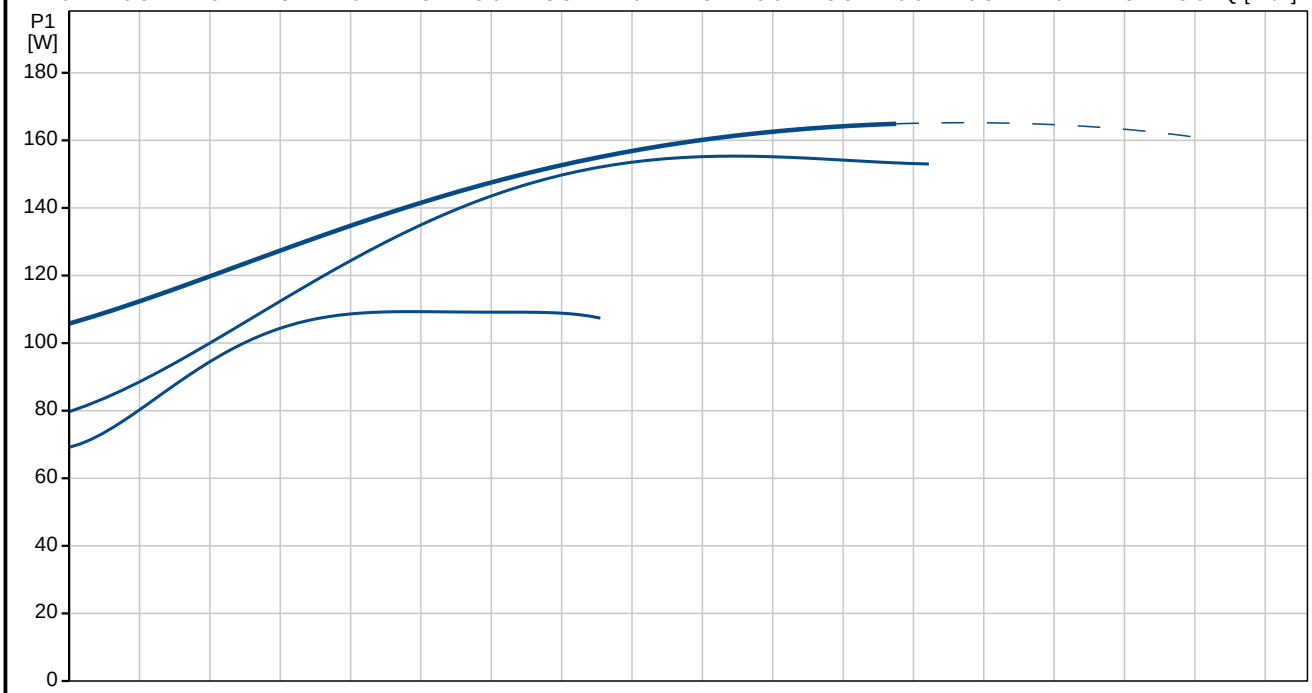

Description	Value
Product name:	UPS 25-80 180
Product No:	95906429
EAN number:	5700310343952
Price:	On request
Technical:	
Speed no:	3
Head max:	80 dm
TF class:	110
Approvals on nameplate:	AAA
Materials:	
Pump housing:	Cast iron
	EN-JL1030
	ASTM 30 B
Impeller:	Composite, PES/PP
Installation:	
Amb. max at 80 dgr C liquid:	40 °C
Maximum operating pressure:	10 bar
Pipe connection:	G 1 1/2
Pressure stage:	PN 10
Port-to-port length:	180 mm
Liquid:	
Pumped liquid:	Water
Liquid temperature range:	-25 .. 110 °C
Liquid temp:	60 °C
Density:	983.2 kg/m³
Kinematic viscosity:	1 mm2/s
Electrical data:	
Power input in speed 1:	110 W
Power input in speed 2:	155 W
Max. power input:	165 W
Mains frequency:	50 Hz
Rated voltage:	1 x 230 V
Current in speed 1:	0.5 A
Current in speed 2:	0.7 A
Current in speed 3:	0.7 A
Capacitor size - run:	4 µF
Enclosure class (IEC 34-5):	X4D
Insulation class (IEC 85):	F
Motor protec:	CONTACT
Thermal protec:	internal
Controls:	
Pos term box:	9H
Others:	
Net weight:	4.4 kg
Gross weight:	5.2 kg
Shipping volume:	0.008 m3

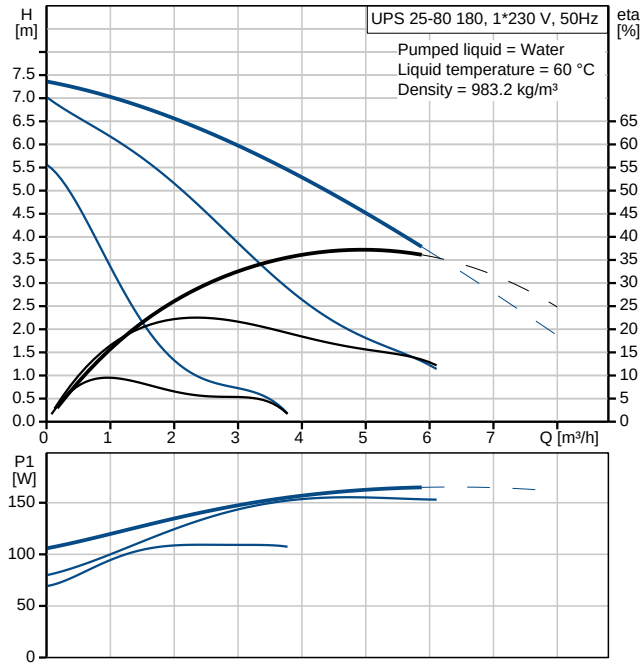

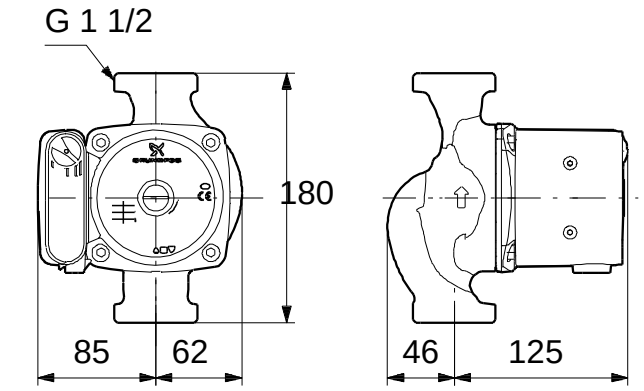

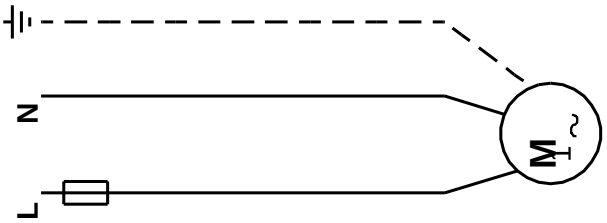

95906429 UPS 25-80 180 50 Hz

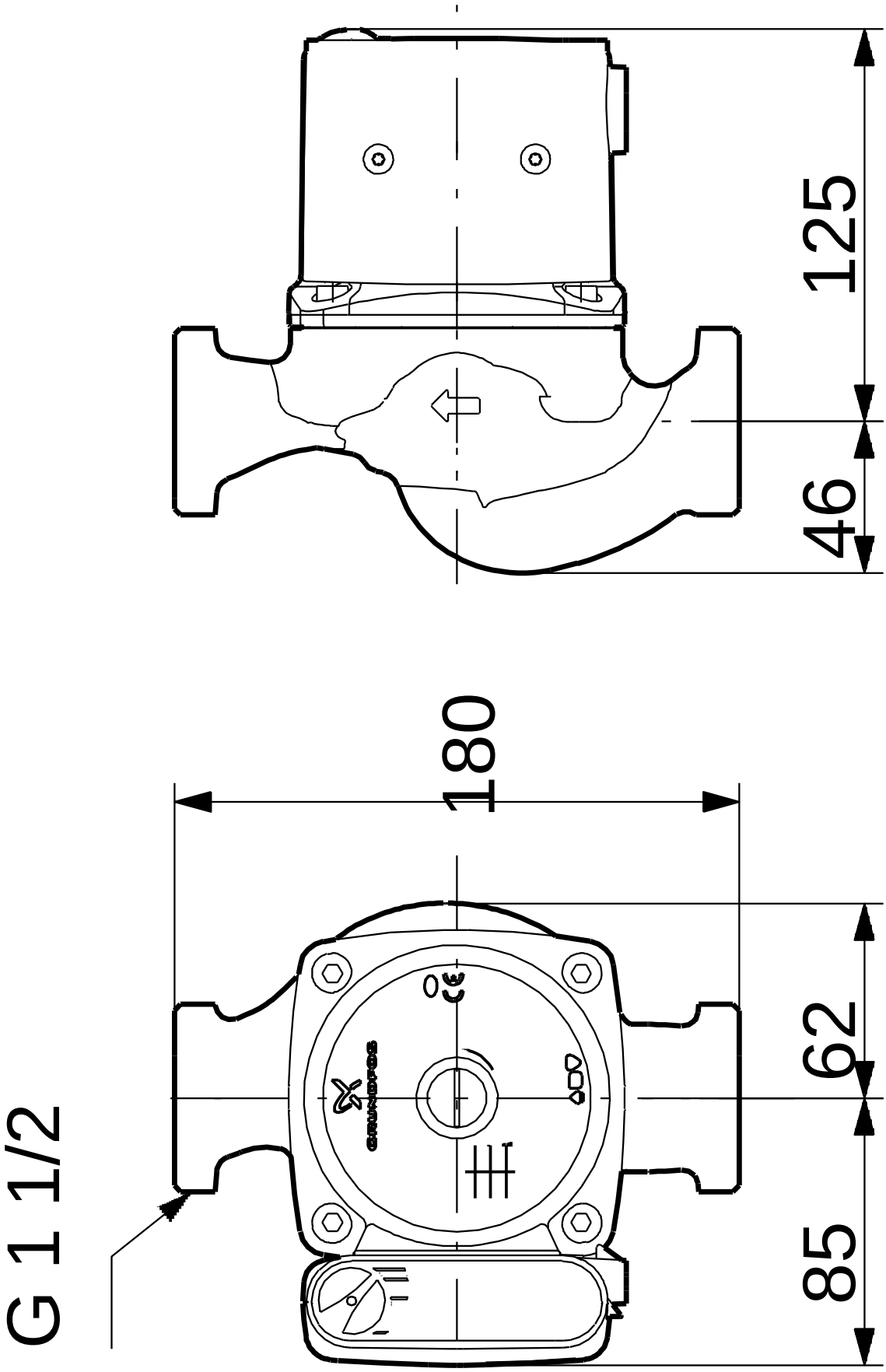

Note! All units are in [mm] unless others are stated.
Disclaimer: This simplified dimensional drawing does not show all details.